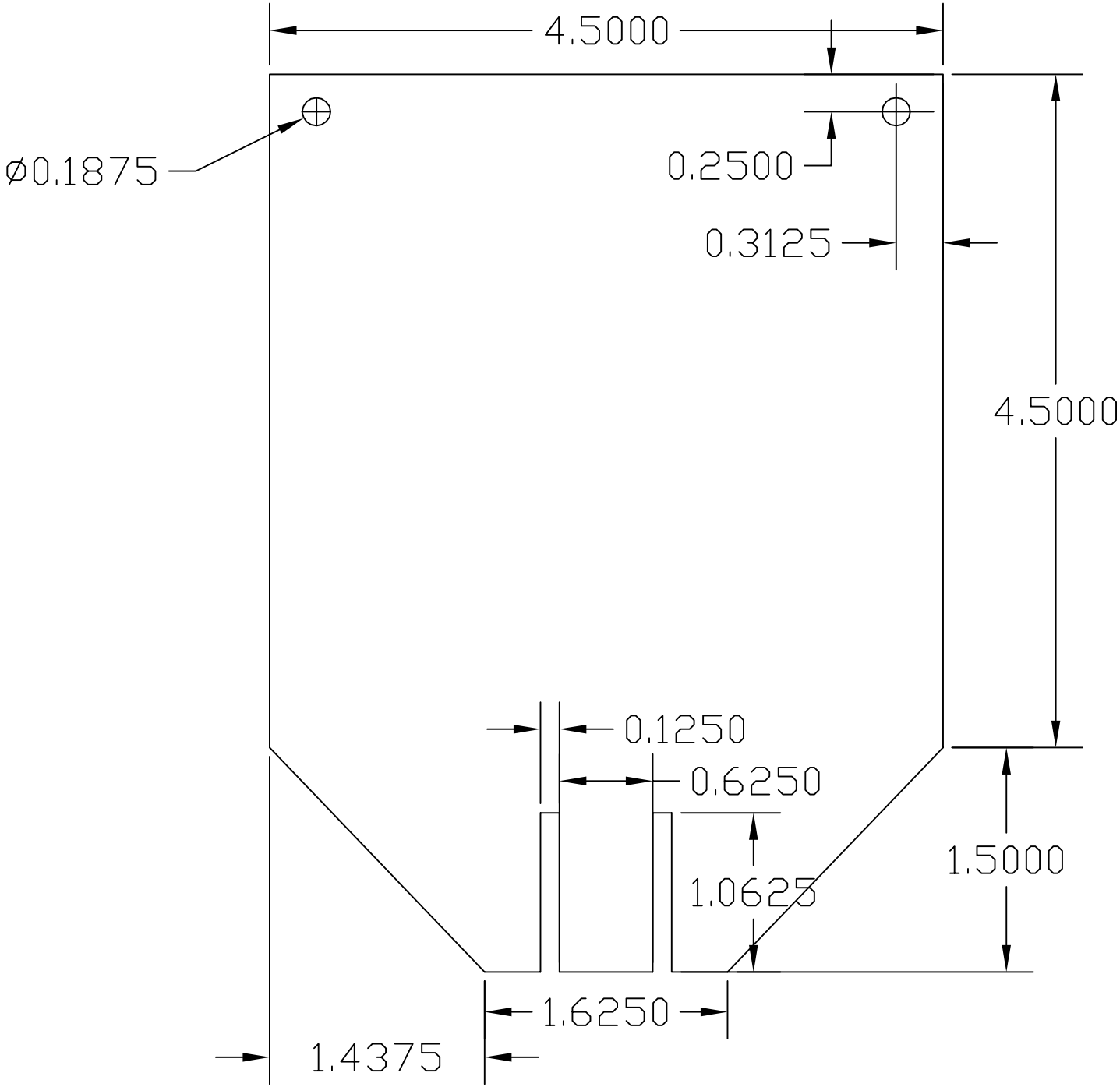
4.5000
Ø0.1875
0.2500
0.3125
4.5000
0.1250
0.6250
1.0625
1.5000
1.6250
1.4375